Specifications

Video Format	NTSC or PAL: ITU601 PC-RGB: 640 x 480/120Hz, 800 x 600/120Hz, 832 x 624/80Hz, 1024 x 768/80Hz, 1152 x 864/80Hz, 1152 x 870/75Hz, 1280 x 1024/75Hz, 1600 x 1200/60Hz (RGB VH: positive/negative logic) * VESA DMT Version 1.0 Revision 10 conform * The refresh rate is the maximum value of each resolution.	**Connectors**	**Input** Video (Composite): BNC type x 6 (Ch 1 - 6) S-Video: 4-pin mini DIN type x 4 (Ch 5 - 8) PC-RGB: D-SUB 15-pin shrink type x 2 (Ch 7 - 8) * S-Video input takes priority for channels 5-8. **Output** A/B MIX: 4-pin mini DIN type x 1, BNC type x 2 + Preview x 1 (*1) PGM-OUT: 4-pin mini DIN type x 1, BNC type x 2 + Preview x 1 (*2) *1: Preview displays one of input channel 1 to 8 video and on-screen menu. *2: Preview displays one of input channel 6 to 8 video and A/B MIX OUT video. **Monitor Output** Video (Composite) BNC type x 8 (Ch 1 - 8)	**Tally Output**	D-sub 15pin shrink type, maximum Input = 12V, 200mA open collector type
Sampling Rate	Video 4:2:2 (Y: B-Y: R-Y), 8bit, 13.5MHz			**Video Transition**	A/B MIX: Cut, Mix (Dissolve, FAM, NAM), Wipe (Hard edge wipe, Soft edge wipe) DSK: Cut, Mix (Dissolve)
Frame Synchronizer	4 systems			**Video Composition**	A/B MIX: Picture in Picture DSK: Luminance Key, Chroma Key, Picture in Picture
Input level/ Impedance	Video (Composite): 1.0Vp-p, 75Ω S-Video: <Luminance Signal> 1.0Vp-p, 75Ω <Chroma Signal> 0.286mVp-p, 75Ω (NTSC)/0.3mVp-p, 75Ω (PAL) PC-RGB: 0.7Vp-p, 75Ω (H, V: 5V TTL)			**Power**	AC Adaptor (Accessory)
				Current Draw	2,200mA
Output level/ Impedance	Video (Composite): 1.0Vp-p, 75Ω S-Video: <Luminance Signal> 1.0Vp-p, 75Ω <Chroma Signal> 0.286mVp-p, 75Ω (NTSC)/0.3mVp-p, 75Ω (PAL)			**Dimensions**	376(W) x 315(D) x 136(H) mm, 14-13/16(W) x 12-7/16(D) x 5-3/8(H) inches
		Remote Control Interfaces	MIDI (IN, OUT/THRU), RS-232C (D-SUB 9-pin type)	**Weight**	4.3kg, 9 lbs 8 oz
				Accessories	AC Adaptor, BNC to RCA video adapter x 4

Block Diagram

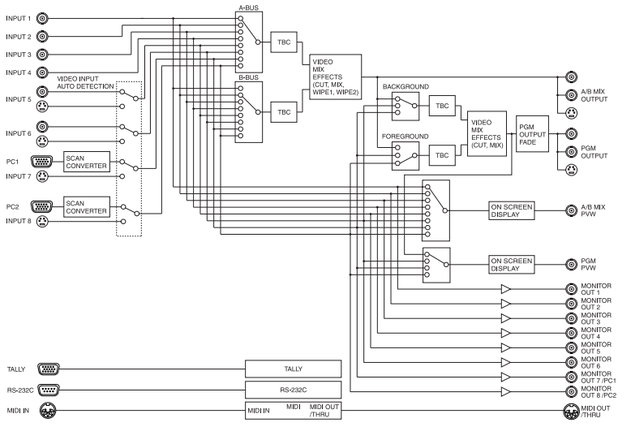

Dimensions

unit:mm

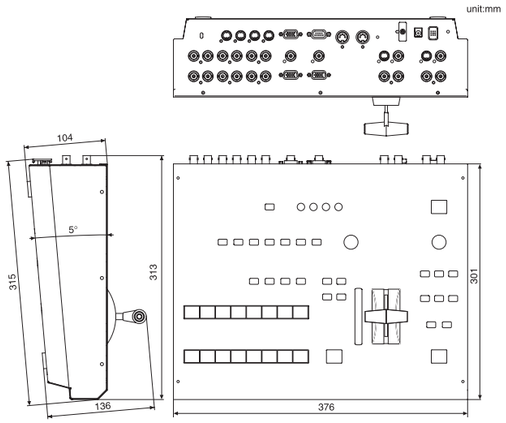

■Rear Panel

- Supports 8 inputs including Composite, S-Video, and 2 inputs for computer.
- Supports 2 independent outputs including A/B MIX and PGM OUT.
- Monitor output for all channels.
- Remote control applications using MIDI or RS-232C protocols.

V-LINK Using V-LINK, musicians can "play" video from their electronic instrument when used with EDIROL video products. With V-LINK, musicians have a powerful interface for realtime audio and video integration.

Ensuring high quality while protecting the environment: Roland is ISO9001 and ISO14001 certified
At Roland, several group companies have obtained ISO9001 certification. In addition, in January 1999, Roland also received ISO14001 international environmental management system certification. We're actively seeking ways to maintain harmony with the environment. (ISO=International Standardization Organization: an organization for the promotion of standardization of international units and terms. They provide different categories of certification: ISO9001 Series certification is a product quality certification for products that undergo a certain level of quality control from the design stage to the after service stage; ISO14001 Series certification is for environment-related standards. Each member of the Roland Group is striving to obtain certification.)

●Microsoft and Windows are registered trademarks of Microsoft Corporation. Windows® is known officially as : "Microsoft® Windows® operating system." Windows Vista is a registered trademark of Microsoft Corporation.
●Mac OS is a trademark of Apple Computer,Inc. ●All product names mentioned in this document are trademarks or registered trademarks of their respective owners.

EDIROL by Roland Roland Systems Group

www.rolandsystemsgroup.net

All specifications and appearances are subject to change.
All trademarks used in this catalog are the property of their respective companies.

JUL. 2009 RAM-7027 GEN

EDIROL by Roland

Roland Systems Group

LVS-800

VIDEO MIX/LIVE SWITCHER

Powerful Eight Channel Video Mixer

- Two Independent Outputs for Multi-Screen Applications
- Downstream Keyer for Seamless Mixing Under Title/Graphics
- Two separate PC/RGB inputs with Scan Converters
- Panel Presets for Instant Recall of Mixer Parameters

Powerful video production with simple and intuitive video mixing and switching. Eight video channels including two computer inputs. DSK (Downstream Keyer) enables graphic and title overlays. Ideal for any live event and presentation.

Video Input **RGB Input** Connect up to eight video sources including: video cameras, DVD and video players, visual samplers, and direct computer inputs.

◎Two PCs can be input simultaneously.

Video Output Multiple outputs with separate A/B Mix and Program Out.

A/B MIX

PGM OUT

A/B MIX

Eight video sources can be mixed and switched with operational ease. Also supports two PC inputs. Create effective video productions using PinP and transitions.

■PinP (Picture in Picture) can inset a small video window within the main video window.

■Various video transitions are selectable.

DSK (Downstream Keyer: Composition Function)

DSK is a powerful function for compositing titles, lyrics and graphics. Setup is simple - just select background and foreground, then adjust the key value.

■Composite a video with a title using a Luminance key.

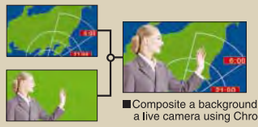

■Composite a background behind a live camera using Chroma key.

Panel Presets

Save favorite setups for convenient and instant recall.

Output Fade

Press the button, final output (PGM) can be faded to black or white. Output fade color is menu selectable.

V-LINK

Audio faders on RSS audio mixer can follow transitions of input selection and T-bar position for audio follows video function.

Setup Examples

Live Stage Production

The LVS-800 is ideal for live production, performance, IMAG, and worship applications. Graphics and text from a PC can be composited over video sources. Additionally, independent outputs from the A/B mix and Program out busses can be sent to difference screens creating exciting multi-screen environments.

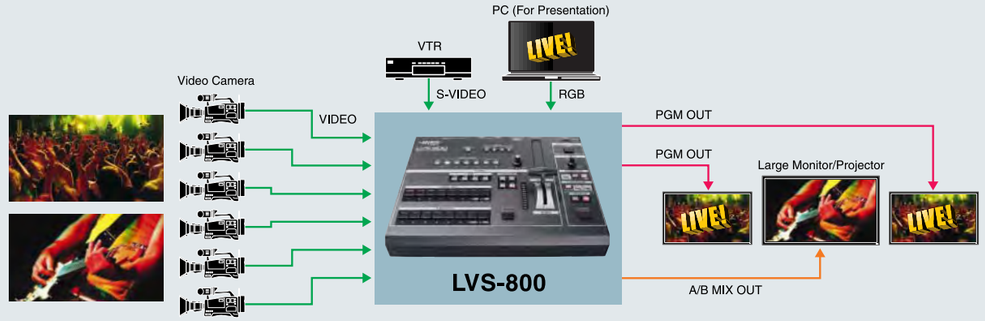

Video Recording

Ideal for presentation and education/learning environments, the LVS-800 enables six video camera inputs along with computer inputs for notes and another for graphics. The recorded material can be aided by having reminder text inserted while the live feed can simply include the graphics.

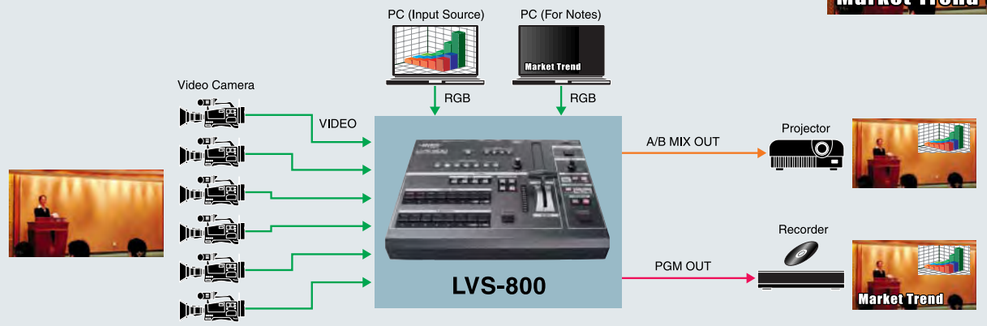

Live Streaming

In this example, the LVS-800 provides a powerful but compact virtual studio environment. The Downstream Keyer enables green screen compositions. Combined with the EDIROL P-10 Visual Sampler and video content from a PC, this setup is ideal for web streaming and live recording applications.

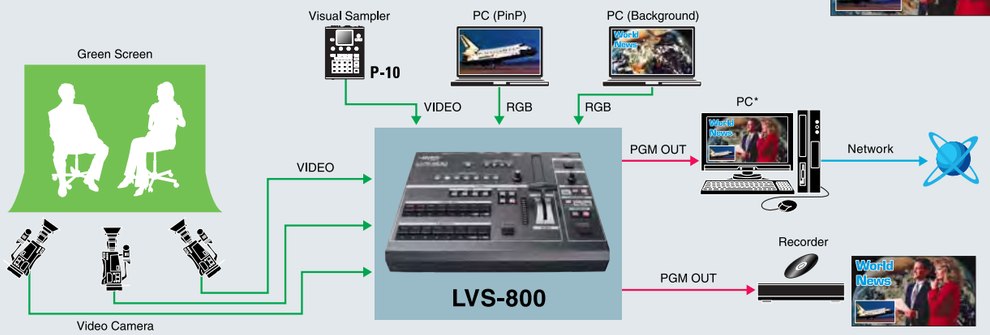

*Video and audio interface is required.

VIDEO MIX/LIVE SWITCHER LVS-800

V-LINK